1] In the given circuit, values of I, I_1, I_2, I_3 & I_4 are (in Ampere) respectively.

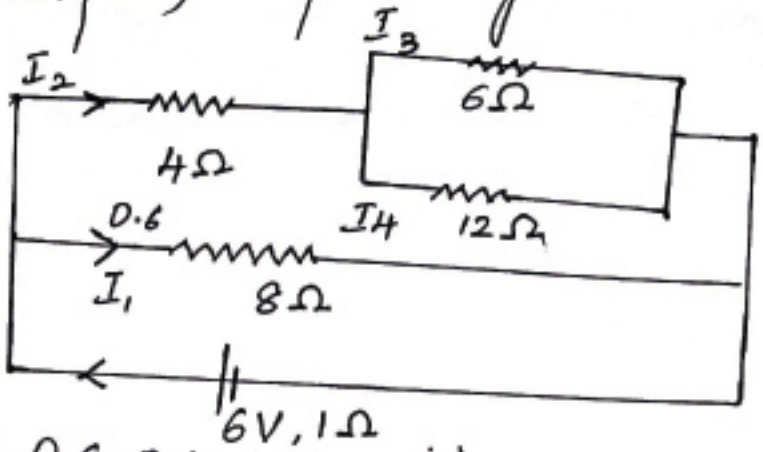

a) 1.2, 0.6, 0.6, 0.4, 0.2.
b) 1.2, 0.6, 0.6, 0.2, 0.4.
c) 1.5, 0.8, 0.7, 0.3, 0.4.
d) 1.5, 0.6, 0.9, 0.4, 0.5.

2]. The uniform wire of resistance 10Ω is bent into a circle and two points at a quarter of circumference apart are connected to a battery of Emf 2.3V, (r=0) then I_1 & I_2 are

a) 0.6A, 0.2A.
b) 0.2A, 0.6A.
c) 0.3A, 0.1A
d) 0.1A, 0.3A.

3) The given 4-terminal n/w is the part of a larger circuit, the points A, B, C are at same potential, the potential difference b/w any one of the points are A or B or C and D is 40 V, the pd b/w A & O.

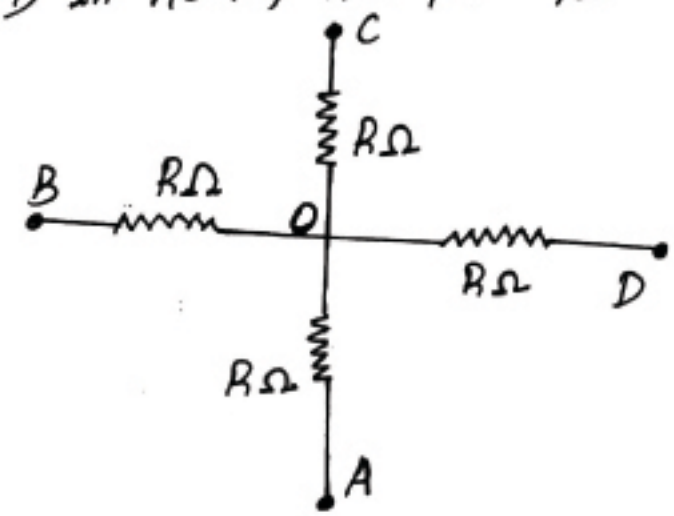

a) 10V b) 15V c) 18V d) 20V.

4) In the circuit shown in figure the current through.

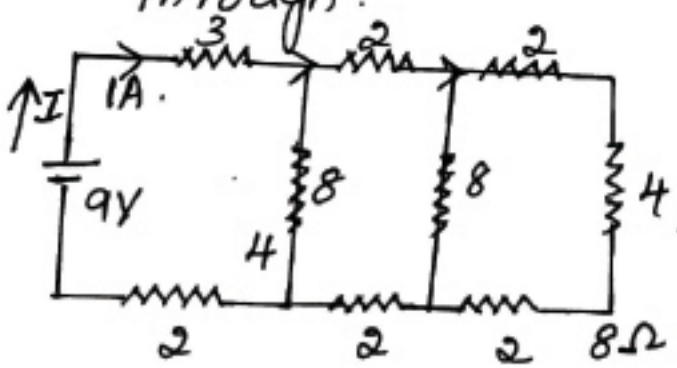

a) 3Ω resistor is 0.5A.

b) 3Ω resistor is 0.25A

c) 4Ω resistor is 0.5A.

d) 4Ω resistor is 0.25A.

5) A housewife uses 100 W bulbs, 8 hours a day & an electrical heater of 300 W for 4 hours a day total cost for the June month at ₹.1 per unit is.

a) 20 b) 120 c) 30 d) 60.

6) A wire when connected across 220V mains has power dissipated P_1 now the wire is cut into two equal pieces which are connected in parallel to same, power dissipated in this case is P_2 then $P_2 : P_1$ is.

a) 1 b) 2 c) 3 d) 4.

7) If Diode's have forward resistance of 4Ω then I_x =

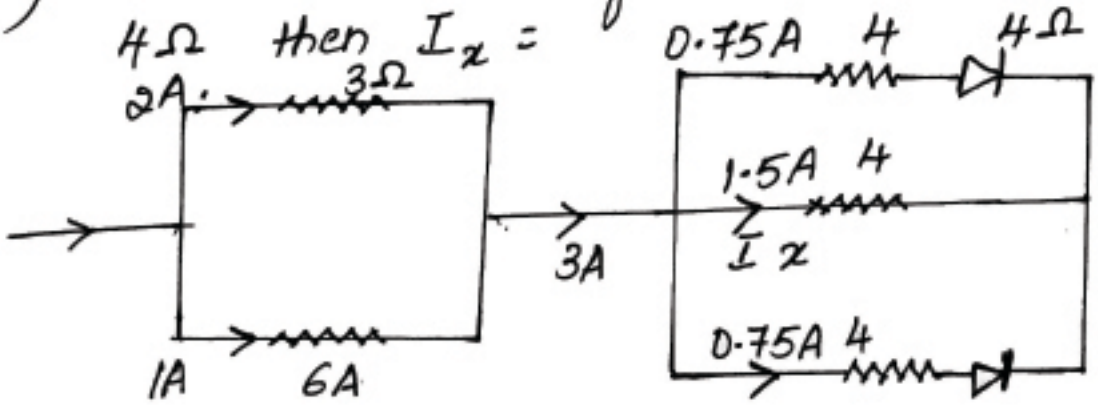

a) 1.5A b) 2A c) 3A d) 1A.

8) Masses of 3 Cu wires are in the ratio 1:3:5 and lengths are in the ratio 5:3:1 ratio of their electrical resistance is.

a) 1:3:5 b) 5:3:1. c) 1:15:125 d) 125:15:1.

Key Answers.

1] a	2] a	3] a
4] d	5] d	6] d
7] a	8] d	